Ses3000 CNC

1994'den beri

Çözüm Ortağınız...

VM

PORTAL MILLING MACHINES

5-axis

with milling head exchange system

YCM®

TRIMILL® machine tools

TRIMILL – your partner for PORTAL MILLING MACHINES

Our main mission is to develop and manufacture portal milling machines with an excellent proportion of QUALITY – OUTPUT – RELIABILITY – PRICE. An important part of our services comprises a well-elaborated system of the warranty and after-warranty service.

A wide selection of the TRIMILL machines contains vertical and horizontal portal milling machines, which are distinguished by high rigidity and accuracy and are intended for machining of pressing tools, moulds and precise workpieces in the single-piece production.

- **Machine travels from (X,Y,Z) 1.100/1.000/700 mm to 13.500/4.500/1.800 mm**
- **Three-, five- and multi-axis design**

Partnership with our customers is based on following pillars:

- Proficiency, experience, professionalism
- Customized solutions
- Development of new solutions
- Top service and immediate availability of spare parts

Figures and facts

- 12.900 m^2 of the production area and more than 130 specialists in development, design, assembly and technology
- Since 2000, when our family company was established, we have been operating in the markets all over the world
- 480 portal machining centres at 200 satisfied customers in 25 countries of the world

Our customers

- Tool factories
- Forging shops
- Automotive industry
- Aerospace industry
- Energy industry

The most frequently machined materials on our machines

- Tool steel
- Aluminium alloys
- Cast iron
- Structural materials

TRIMILL PRINCIPLE: BOX-IN-BOX

"BOX-IN-BOX" is a unique system with closed construction of the cross-beam and cross-slide with internally positioned and guided ram unit (axes Y and Z).

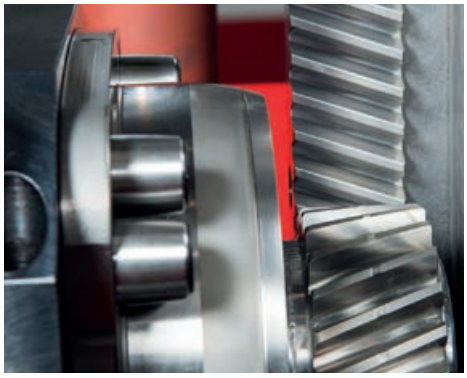

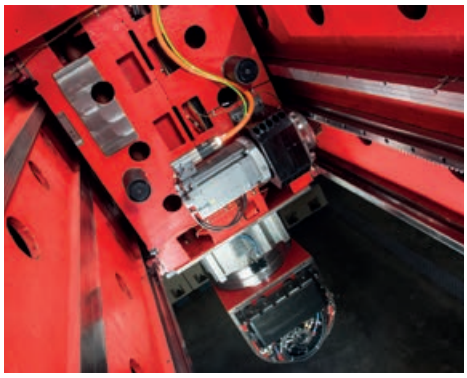

THE ADVANTAGES OF TRIMILL PRINCIPLE:

- Consistent milling results thanks to stable thermo-symmetrical arrangement on linear guideways
- Always 4 guides of the cross and vertical support for the machine, preventing the occurrence of the so-called "banana effect" which deforms/bends the vertical support of the machine
- Increased rigidity of the machine in the X axis by +60%, in the Y axis by +30% and in the Z axis by +90%

Conventional portal milling machine

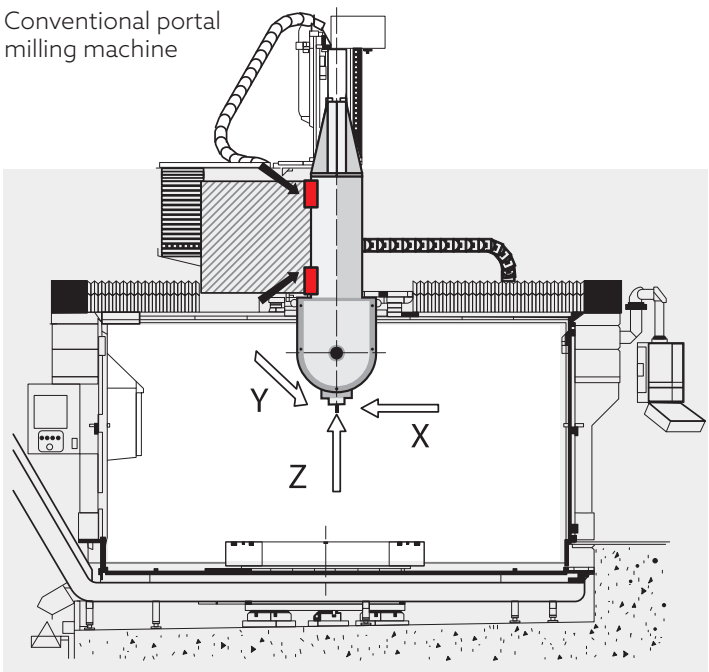

TRIMILL portal milling machine

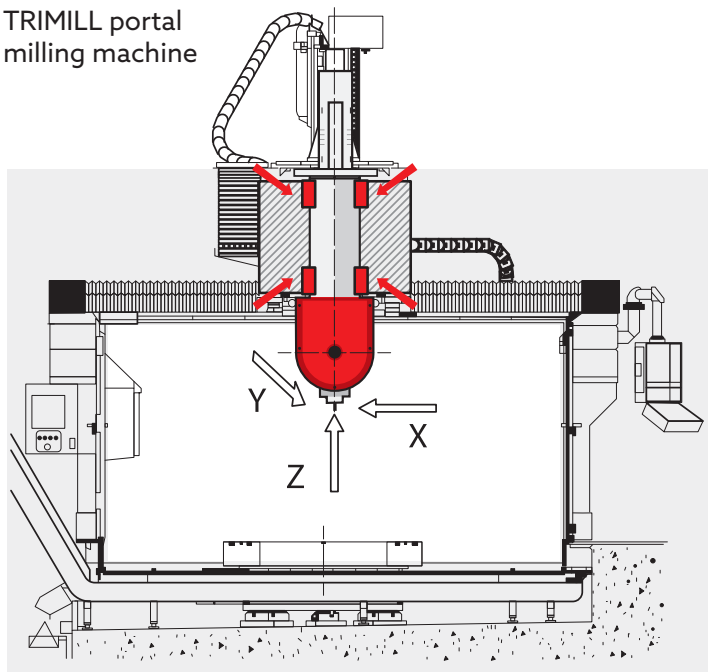

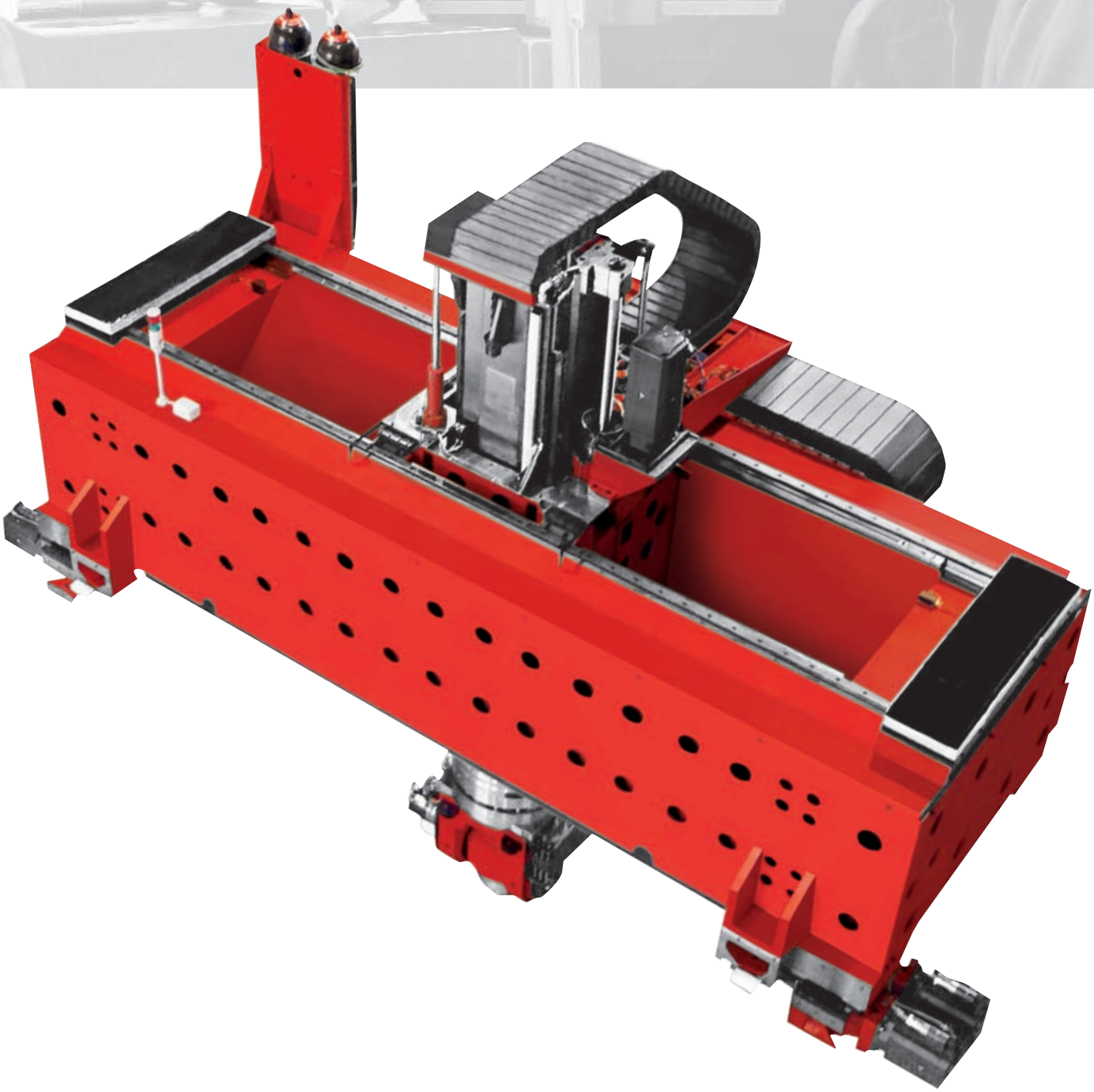

TRIMILL®
machine tools

TRIMILL *VM 13535*

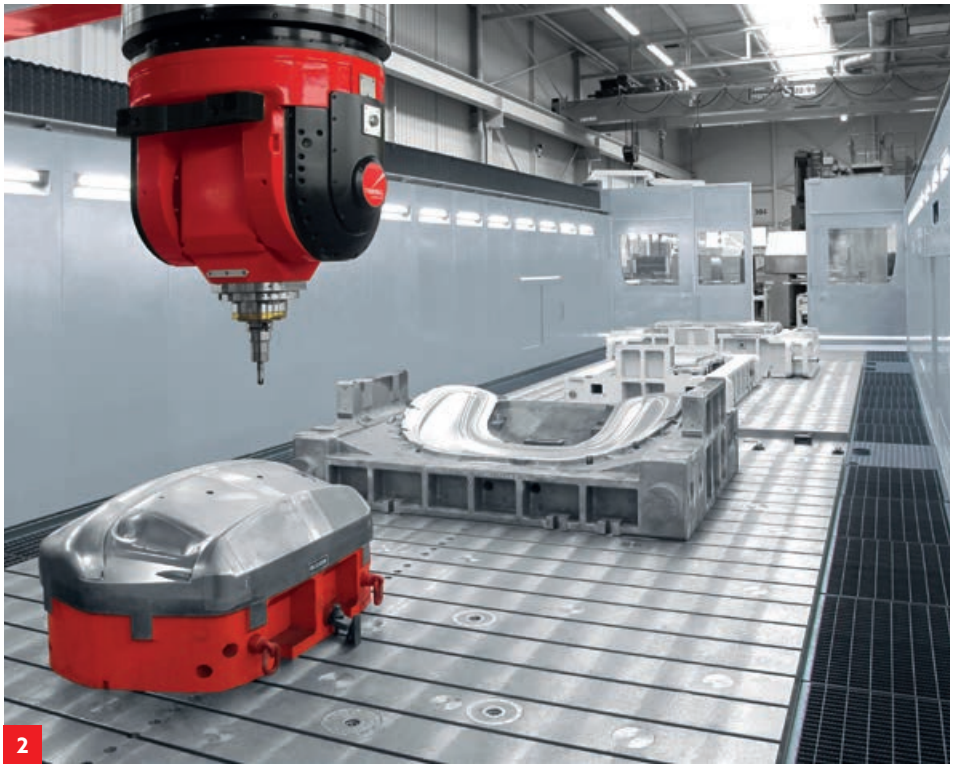

1 5-axis portal milling machine with automatic milling heads exchange. Working travels: X 13.500 mm, Y 3.500 mm, Z 1.500 mm

2 T21M fork-type milling head intended for finishing; stainless steel covers of the interior working area of the machine

3 Tool exchange carried out by a robot, installed at the customer's request

4 A2.1 right-angle milling head

	X	×	Y	×	Z
VM 4525	4.500	×	2.500	×	1.500
VM 4525	4.500	×	2.500	×	1.500
VM 5525	5.500	×	2.500	×	1.500
VM 6525	6.500	×	2.500	×	1.500
VM xx25	xxxx	×	2.500	×	1.500
VM 4535	4.500	×	3.500	×	1.500
VM 5535	5.500	×	3.500	×	1.500
VM 6535	6.500	×	3.500	×	1.500

TMB0140-050-3RBS

HEADS DEVELOPMENT AND PRODUCTION

Together with our machines, we develop, construct, manufacture and also test our own in detail milling heads. And all this right in Zlín!

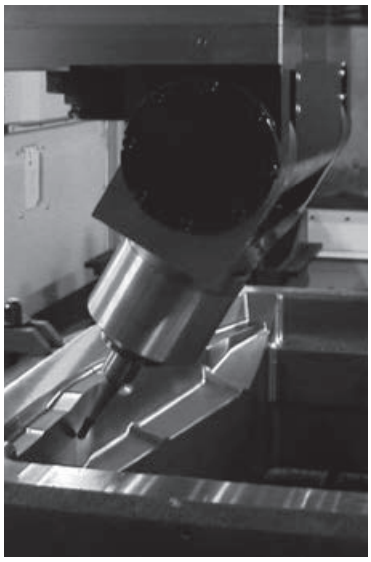

The history of our own production of heads dates back to 2000, when we launched the first own milling head on the DEPOMILL2012 machine.

Not only special spaces for the production of heads, but above all highly qualified staff with many years of experience are a guarantee for this high-tech production. We currently offer 9 custom types of milling heads.

Thanks to our own production of heads, our customers also gain a great advantage in subsequent service care. TRIMILL technicians know in detail the construction of our milling heads and we have components and spare parts for milling heads in stock. Of course, there is a virtually immediate response to customer needs.

U2M

F4M/F5M

T19M/T21M

T30M

H3M

S1M

S2M/S3M

S4M

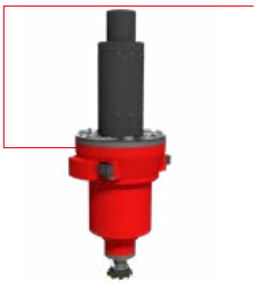

A2.1M

TRIMILL HEADS

U2M

positioning

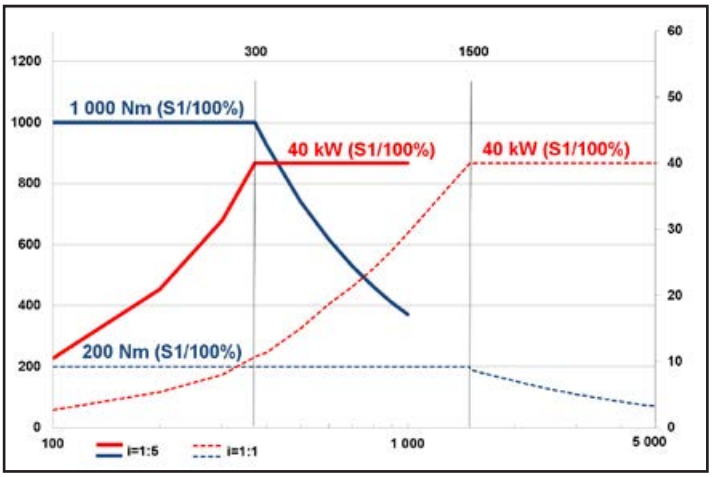

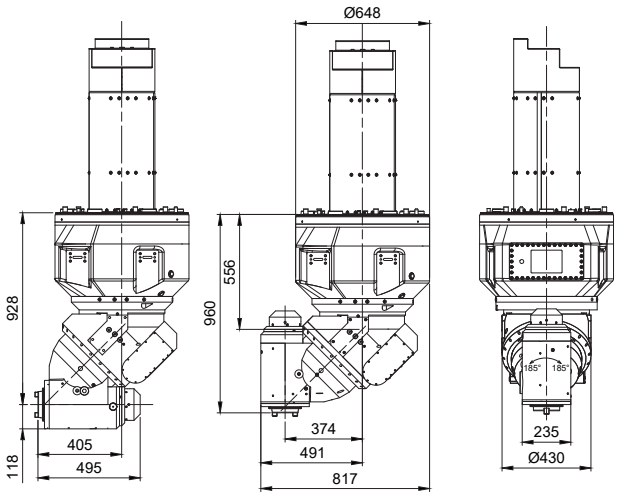

Power S1: 40 kW
Torque S1: 1000 Nm
Max. Speed: 5 000 rpm
Tool holder: SK-50, HSK-A100

F4M / F5M

continuous / positioning

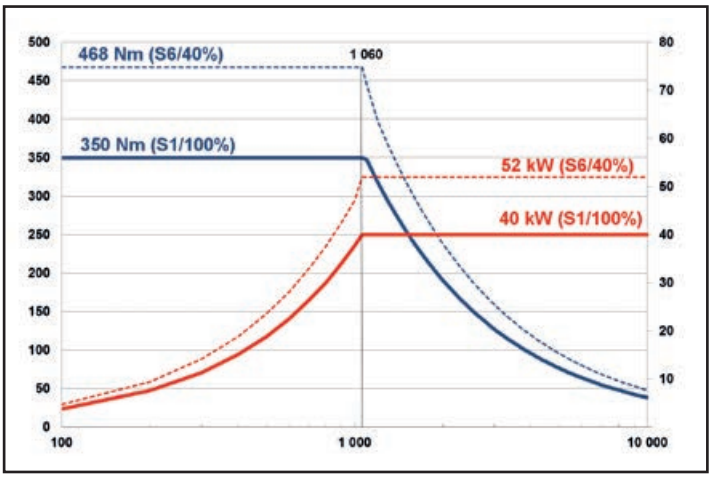

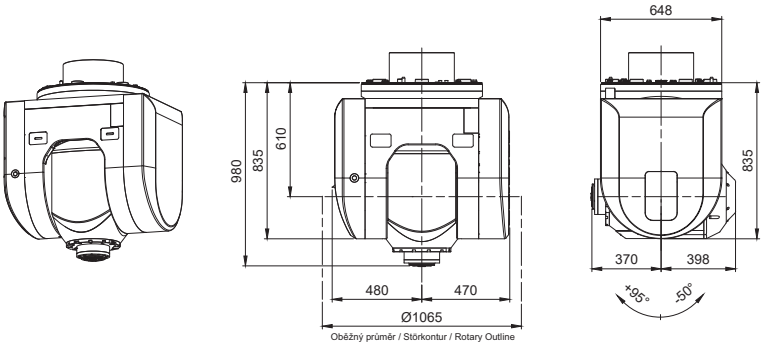

40kW, 350 Nm, 10.000/min, HSK-A100
B axis (milling head):-50/+95°
C axis (milling head):+/-240°
F4 – continuous milling
F5 – positioning milling (in steps of 0.001°)
B-axis clamping torque 17.200 Nm
C-axis clamping torque 15.000 Nm

T19M

continuous

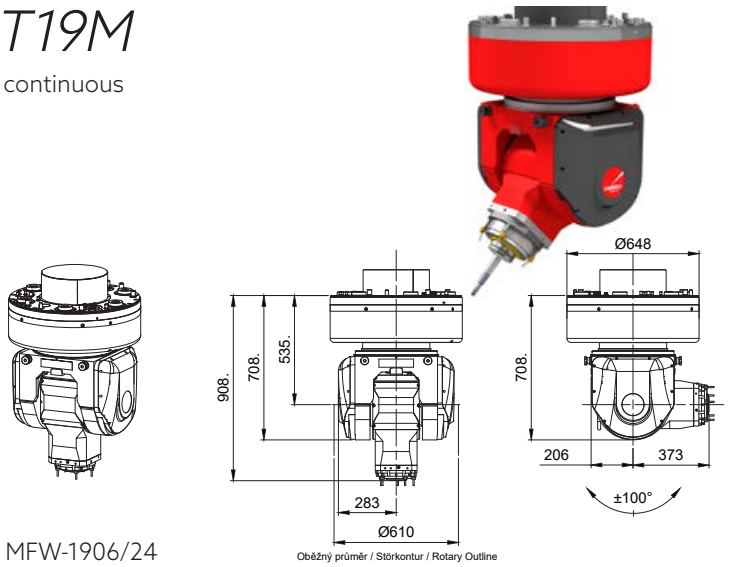

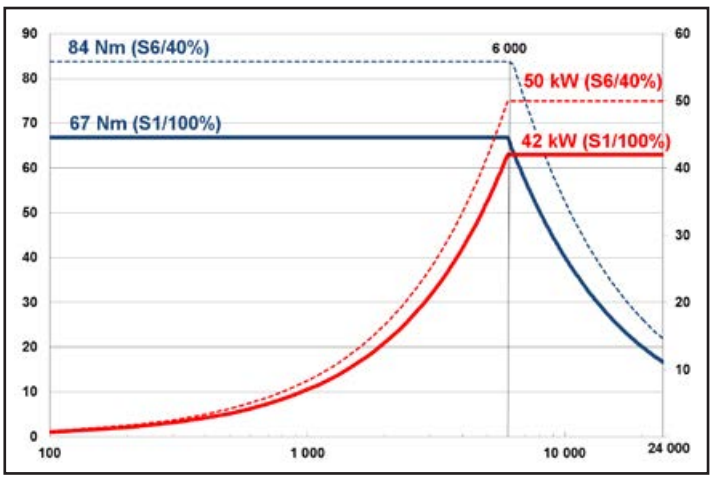

MFW-1906/24

S1: 42 kW, 67 Nm; S6: 50 kW, 84 Nm; 24.000/min, HSK-A63

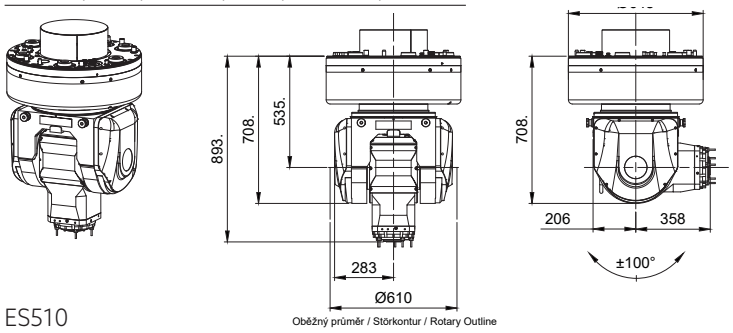

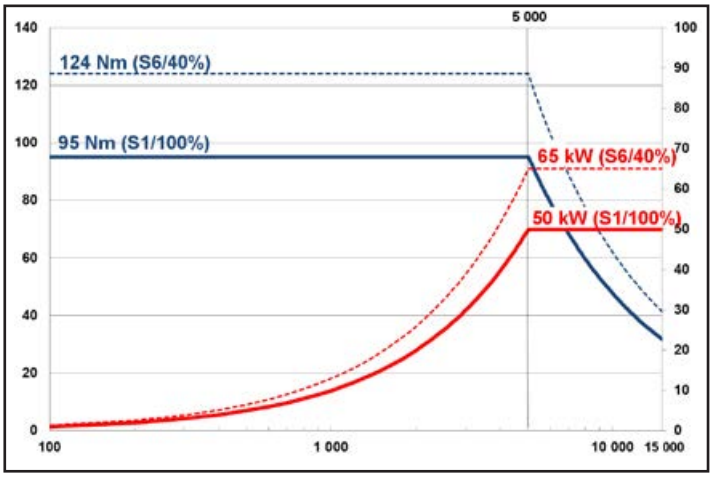

ES510

S1: 50 kW, 96 Nm; S6: 65 kW, 124 Nm; 15.000/min, HSK-A100

T21M / T21 CSC

continuous

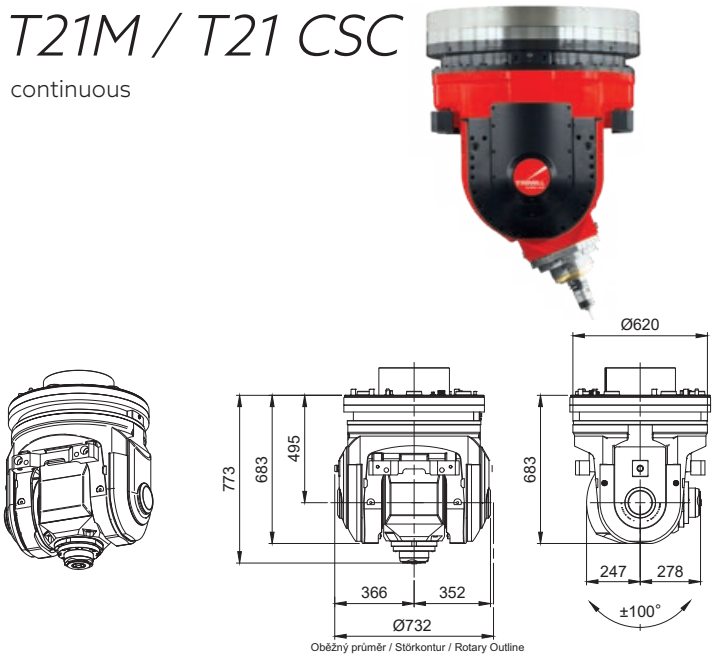

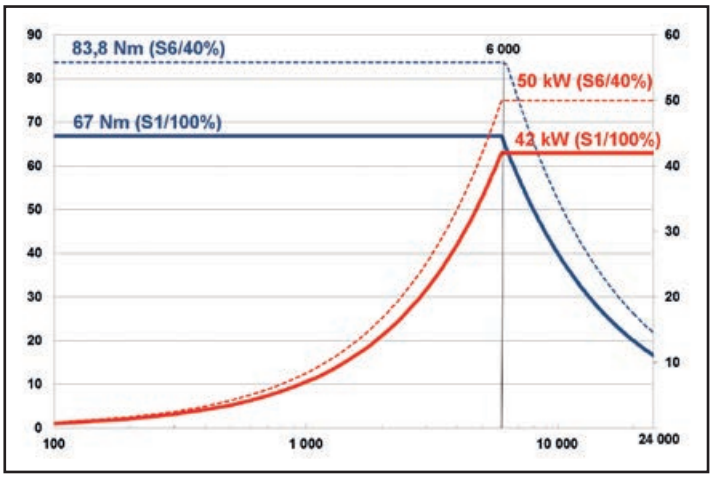

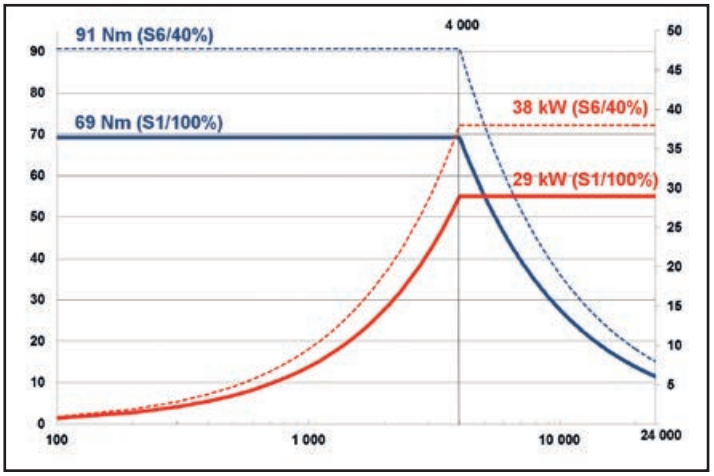

T21M

42kW, 67 Nm, 24.000/min, HSK-A63
B axis (milling head):+/-100°
C axis (milling head):+/-240°
B-axis clamping torque 4.000 Nm
C-axis clamping torque 15.000 Nm

T21M CSC

29kW, 69 Nm, 24.000/min, HSK-A63
B axis (milling head):+/-100°
C axis (milling head):+/-240°
B-axis clamping torque 4.000 Nm
C-axis clamping torque 15.000 Nm

T30M / T30M CSC

continuous

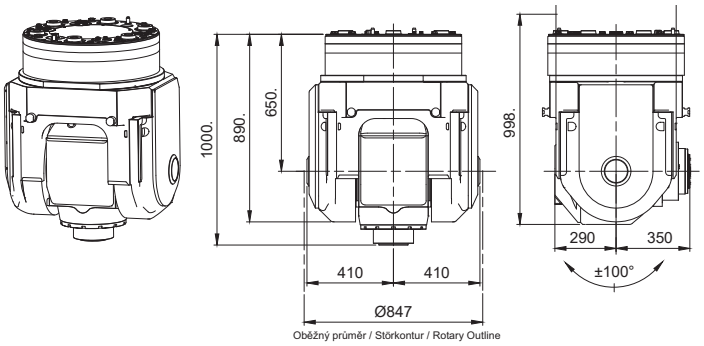

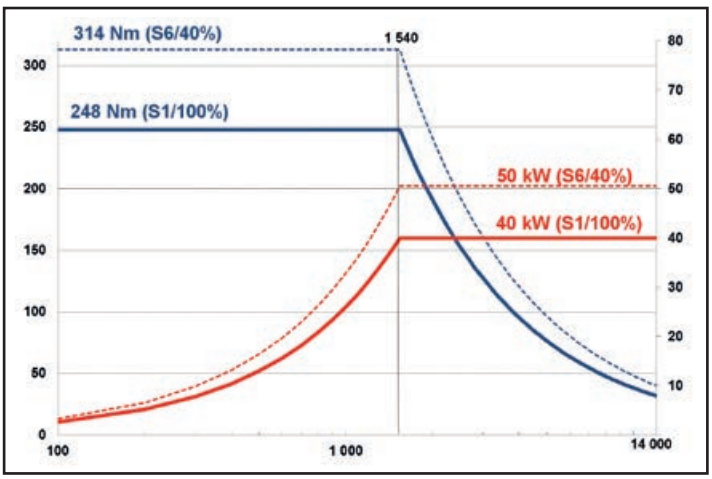

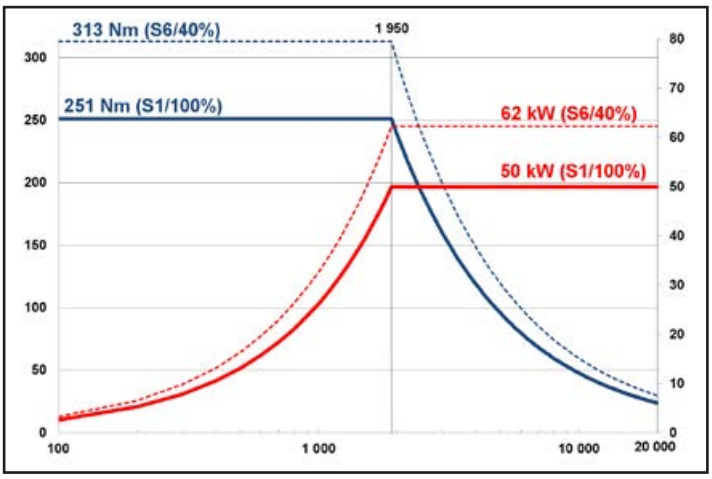

T30M	T30M CSC
40kW, 248 Nm, 14.000/min, HSK-A100	50kW, 251 Nm, 20.000/min, HSK-A100
B axis (milling head): +/-100°	B axis (milling head): +/-100°
C axis (milling head): +/-240°	C axis (milling head): +/-240°
B-axis clamping torque 8.000 Nm	B-axis clamping torque 8.000 Nm
C-axis clamping torque 15.000 Nm	C-axis clamping torque 15.000 Nm

H3M

positioning

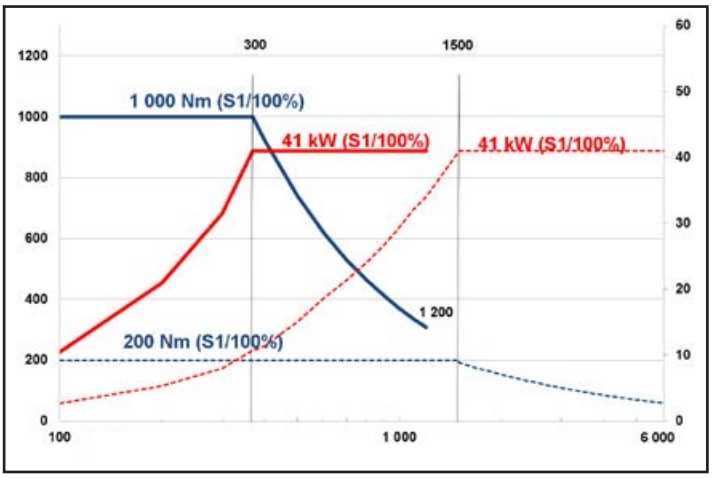

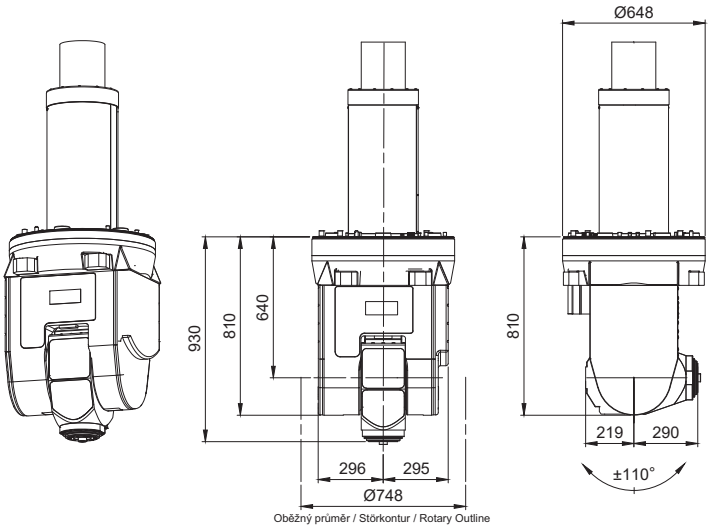

41 kW, 1.000 Nm, 6.000/min
B axis (milling head): +/-105°
C axis (milling head): +/-240°
B-axis strengthening moment 6.000 Nm
Tool holder: SK-50, HSK-A100

S1M

straight

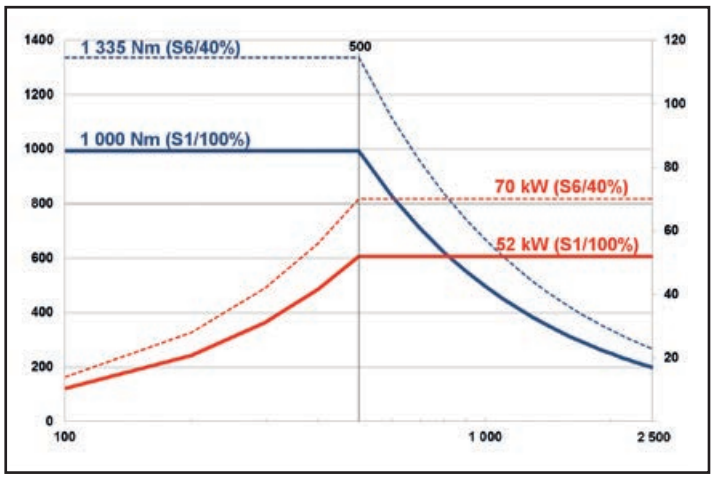

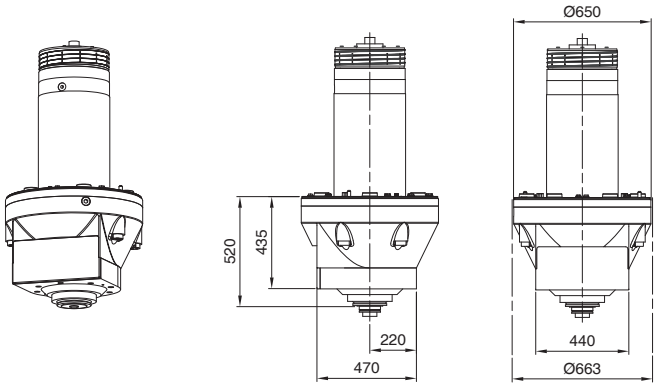

Oběžný průměr / Störkontur / Rotary Outline

52 kW, 1.000 Nm, 2.500/min, HSK-A100

S2M / S3M

straight

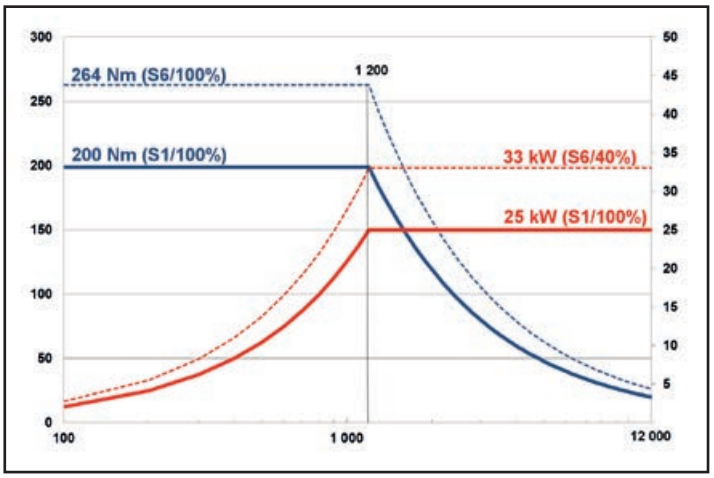

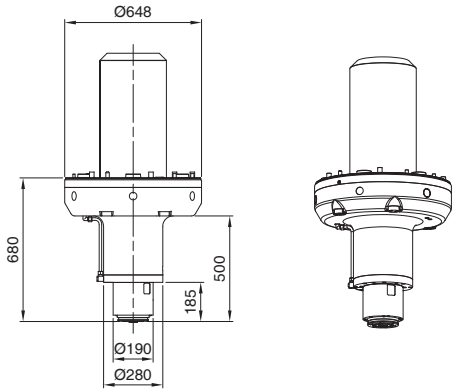

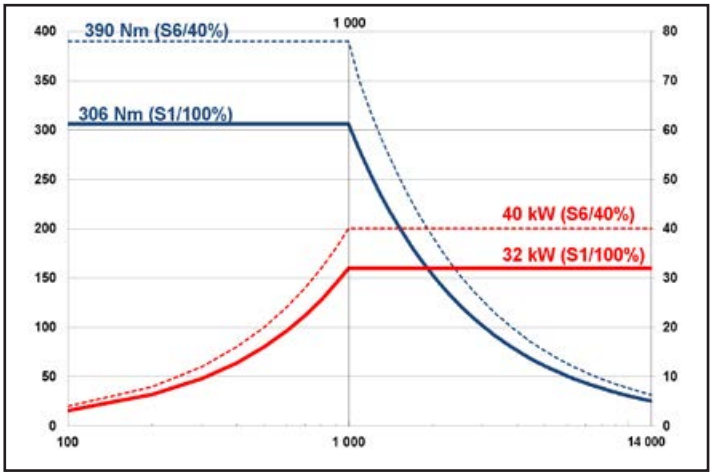

S2M

25 kW, 200 Nm, 12.000/min, HSK-A100

S3M

32 kW, 306 Nm, 14.000/min, HSK-A100

S4M

straight

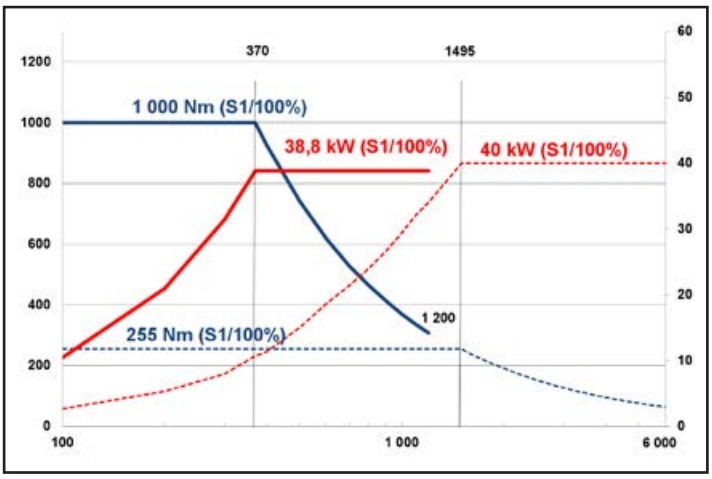

38,8 kW, 1.000 Nm, 6.000/min, HSK-A100

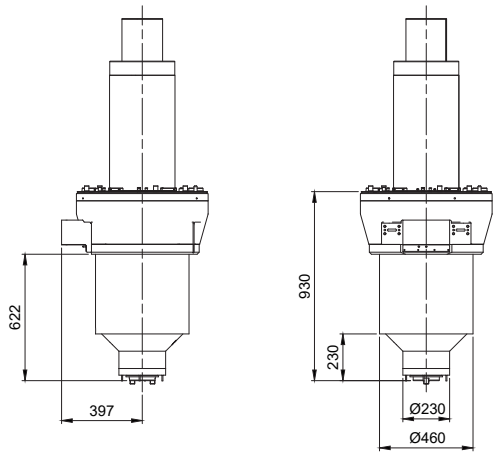

A2.1M

angled

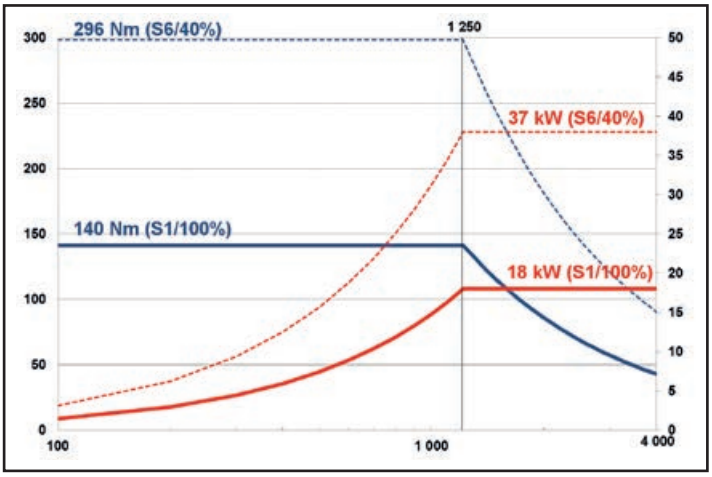

18 kW, 140 Nm, 3.000/min, HSK-A100

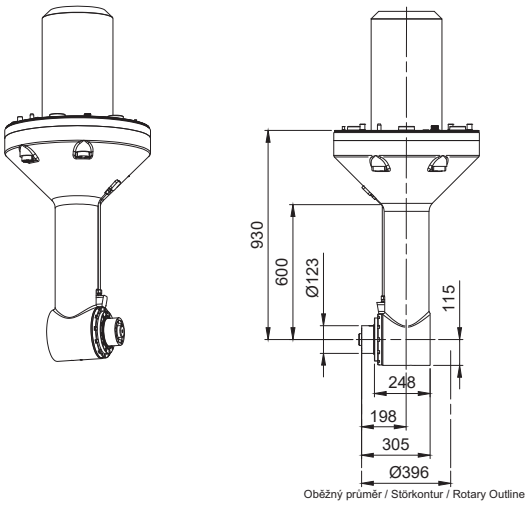

TRIMILL *VM 6545*

1 Portal milling machine VM 6545 with automatic milling heads exchange. Working travels: X 6.500 mm, Y 4.500 mm, Z 1.500 mm

2 Automatic tool magazine for 50 tools HSK - A100

3 Chip conveyor with increased ejection

4 CNC control system Heidenhain TNC 640 HSCI with color touch screen

5 Milling head F5M

	X	×	Y	×	Z
VM xx35	xxxx	×	3.500	×	1.500
VM 4545	4.500	×	4.500	×	1.500
VM 5545	5.500	×	4.500	×	1.500
VM 6545	6.500	×	4.500	×	1.500
VM xx45	xxxx	×	4.500	×	1.500

TRIMILL® machine tools

TRIMILL REFERENCE

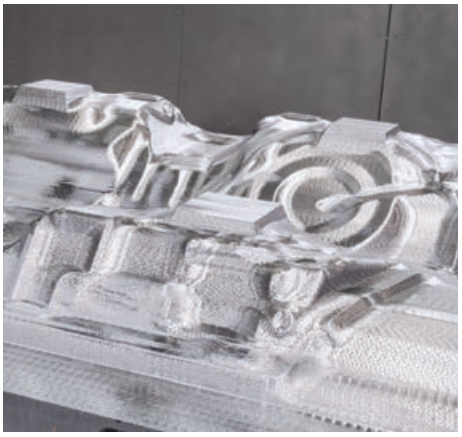

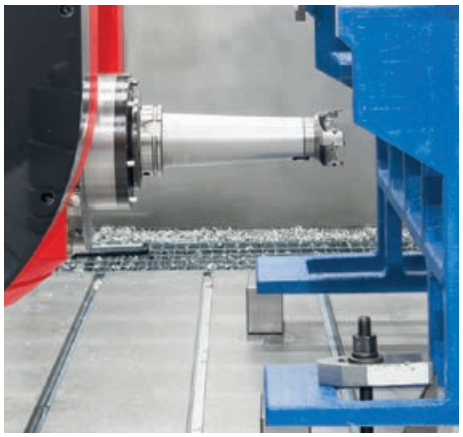

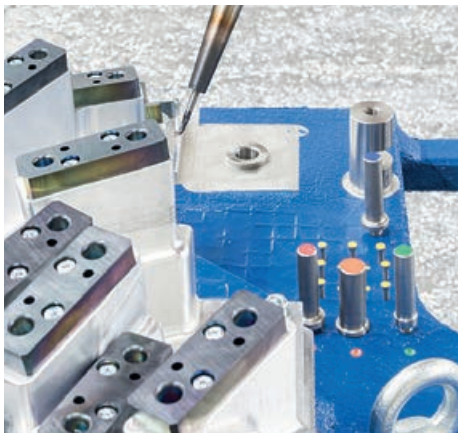

TRIMILL VM 6535
TRIMILL
VM 6535
TRIMILL
machine tools
ABUS 25/10 t

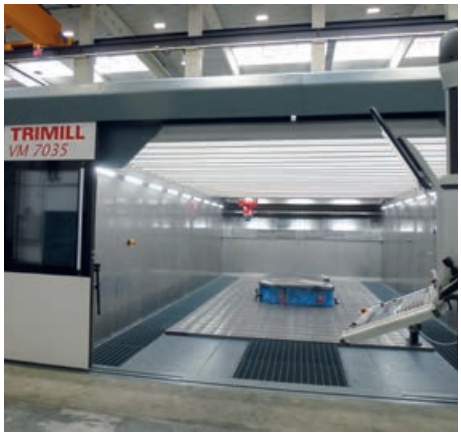
TRIMILL
VM 7035

TRIMILL VM 7035

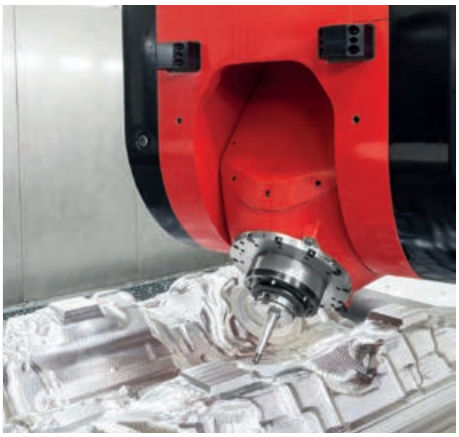

AUTOMATIC REPLACEMENT OF MILLING HEADS

- **the storage of the machining heads is completely closed and protected from contamination**
- **the storage is structurally designed for parallel storage of a maximum of 3 machining heads**
- **the storage location is in the rear of the work area, where it forms the rear wall of the machine**
- **opening and closing the storage, as well as lifting or depositing the machining head is fully automatic**

STANDARD MACHINE PARAMETERS

		VM 4525	VM 4535	VM 4545
Travels				
The x-axis	mm	4.500	4.500	4.500
Y axis	mm	2.500	3.500	4.500
Z axis	mm	1.500 (1.800)		
Opening in the Z axis	mm	1.530 – 1.990		
Clamping surface	mm	5.000 x 2.800	5.000 x 3.800	5.000 x 4.800
Workpiece weight	kg	98.000	133.000	168.000
Feed rate	mm/ min	40.000		
Acceleration	m/s^2	3		
Machine dimensions				
Length	mm	10.415	10.415	10.415
Width	mm	7.830	8.830	9.830
Height	mm	6.208		
Machine weight approx.	kg	103.900	109.900	115.800

STANDARD MACHINE COMPONENTS

STANDARD COMPONENTS	MAKER
Electric spindle	Weiss – Germany, Fischer – Switzerland
Control system	Heidenhain, Siemens – Germany
Electric motors	Siemens – Germany
Measuring	Heidenhain
Toothed combs	Schneeberger – Germany
Linear management	THK – Japan, Schneeberger – Germany, INA
Table	Stolle – Germany
Electrical switchboard	Rittal – Germany
Cooling unit	Rittal – Germany, Eurocold – Italy

OPTIONAL EQUIPMENT *(SELECTION)*

TRIMILL Inform

TRIMILL Teleservice

Active temperature stabilization of the machine

Tool magazine ATC 32, ATC 50, ATC 90+

Tool cooling by external + internal liquid

Workpiece probe

Tool probe

Oil mist micro lubrication - internal, external

Video system with display and 2 controllable color cameras

TRIMILL - Kinematics

HR 550 - wireless hand control

Electrically operated top cover of the machine

Extraction of oil mist and cooling emulsion

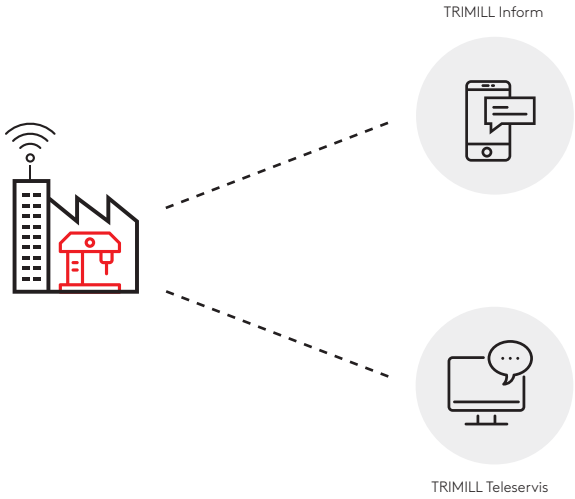

ATC 50 tool magazine

Tool cooling liquid external + internal

Workpiece probe

Tool probe

Micro lubrication with oil fog - inner, outer

CCTV System

TRIMILL - Kinematics

HR 550 - wireless hand control

Electrically operated upper machine cover

Oil mist extraction and cooling emulsions

Oil mist extraction and cooling emulsions

Czech Republic

TRIMILL, a.s.
Dlouhé díly 447
763 02 Zlín-Louky
Czech Republic
Phone: +420 577 112 111
info@trimill.cz
www.trimill.cz

Czech Republic

TRIMILL, a.s.
Jasenice 2061
755 01 Vsetín
Czech Republic
Phone: +420 577 112 171
info@trimill.cz
www.trimill.cz

Germany

TRIMILL GmbH
Zeissstrasse 6
32052 Herford
Germany
Phone: +49 5221 69 448-0
info@trimill.de
www.trimill.de

YCM®

1994'den beri
Ses3000 CNC
Çözüm Ortağınız...